LELO

F1S™ V3 / XL

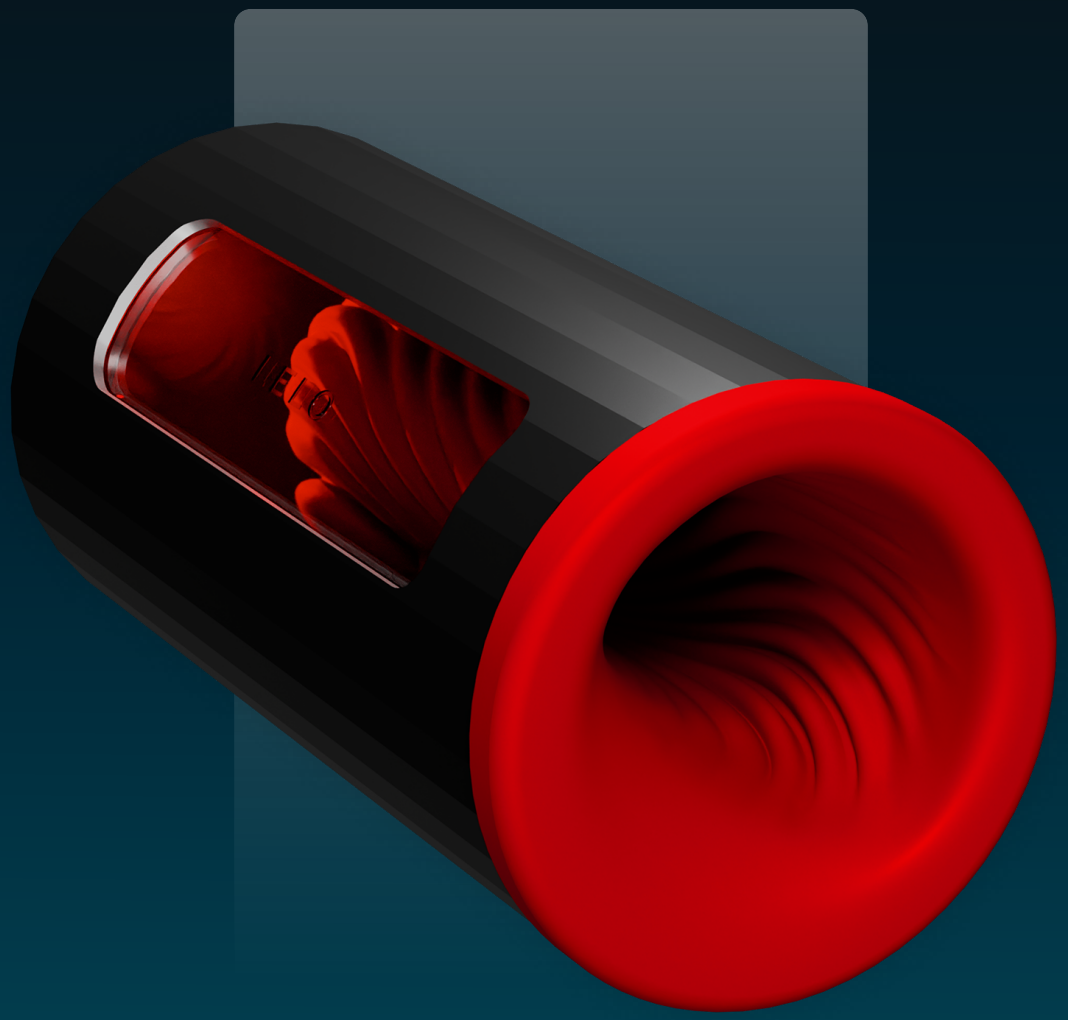

USER MANUAL

F1SV3_PUB1_Q124

A next-gen male pleasure console with two motors for double the power, also available in a special XL size.

Experiment wisely, often and with care.

Congratulations on acquiring F1S™ V3 / XL.
Before getting more closely acquainted with it, please take a moment to look through this user manual.

IMPORTANT

Your pleasure object has been locked for transportation.
To unlock, simply connect the charger or see below.

SAFETY

- Please consult your healthcare provider with any questions or concerns you may have regarding your condition.
- This device should be used by people aged 18 years and over.
- People with reduced physical, sensory or mental capabilities or lack of experience and knowledge should use the device only if they have been given supervision or instruction concerning the use of the device in a safe way and understand the hazards involved.
- Minors should not clean and/or use the device unsupervised.
- Only use the product for the intended purpose. Sharing sex toys with other people may transmit sexual diseases. Do not share your sex toys with people other than your partner.
- Use protective measures with your partner if necessary.
- Do not use the product if you detect any cracks or signs of degradation on the covering material.
- To prevent stains, do not keep your product on the absorbent surfaces. If your product operates abnormally, turn it off and consult the support section on our website.
- Do not use the product if one or more components are damaged.

COMPLIANCE STATEMENT

a. WARNING

Please take note that changes or modifications not expressly approved in writing by the party responsible for compliance could void the user's authority to operate the equipment and/or void any relevant warranties.

b. FCC and IC statements

This device complies with Part 15 of the FCC Rules and Industry Canada license-exempt RSS. Operation is subject to the following two conditions:

(1) This device may not cause harmful interference, and

(2) This device must accept any interference received, including interference that may cause undesired operation.

This class B digital apparatus complies with Canadian ICES-003.

b. Déclarations relatives à la FCC et à l'IC

Cet appareil répond aux exigences de l'article 15 du Règlement de la FCC et aux normes RSS exemptes de licence d'Industrie Canada. Son fonctionnement est soumis aux deux conditions suivantes :

(1) cet appareil ne doit pas causer d'interférences nuisibles, et

(2) il doit accepter toute interférence reçue, notamment celles susceptibles d'entraîner un fonctionnement non désiré.

Cet appareil numérique de classe B est conforme à la norme canadienne NMB-003.

NOTE

This equipment has been tested and found to comply with the limits for a Class B digital device, pursuant to Part 15 of the FCC Rules. These limits are designed to provide reasonable protection against harmful interference in a residential installation. This equipment generates, uses and can radiate radio frequency energy and, if not installed and used in accordance with the instructions, may cause harmful interference to radio communications. However, there is no guarantee that interference will not occur in a particular installation. If this equipment does cause harmful interference to radio or television reception, which can be determined by turning the equipment off and on, the user is encouraged to try to correct the interference by one or more of the following measures:

- Reorienting or relocating the receiving antenna.
- Increasing the separation between the equipment and receiver.
- Connecting the equipment to an outlet on a circuit different from that to which the receiver is connected.
- Consulting the seller, the device dealer or an experienced radio/TV technician for help.
- The device must not be co-located or operate in conjunction with any other antenna or transmitter.
- The device has been evaluated to comply with general RF exposure requirements.
- The device can be used in portable exposure conditions without restriction.
- This device complies with IC RSS-102 radiation exposure limits set forth for an uncontrolled environment.
- Users can obtain Canadian information on RF exposure and compliance.

- Cet appareil ne doit pas être placé près d'une autre antenne ou d'un autre émetteur ou fonctionner conjointement avec ceux-ci.
- L'appareil a été évalué pour répondre aux exigences générales d'exposition aux fréquences radio.
- Il peut être utilisé dans des conditions d'exposition portable sans restriction.
- Cet équipement est conforme aux limites d'exposition stipulées par IC RSS-102 pour un environnement non contrôlé.
- Les utilisateurs peuvent obtenir des renseignements canadiens sur l'exposition aux fréquences radio et sur la conformité.

GETTING TO KNOW YOUR F1S™ V3 / XL

pleasure console

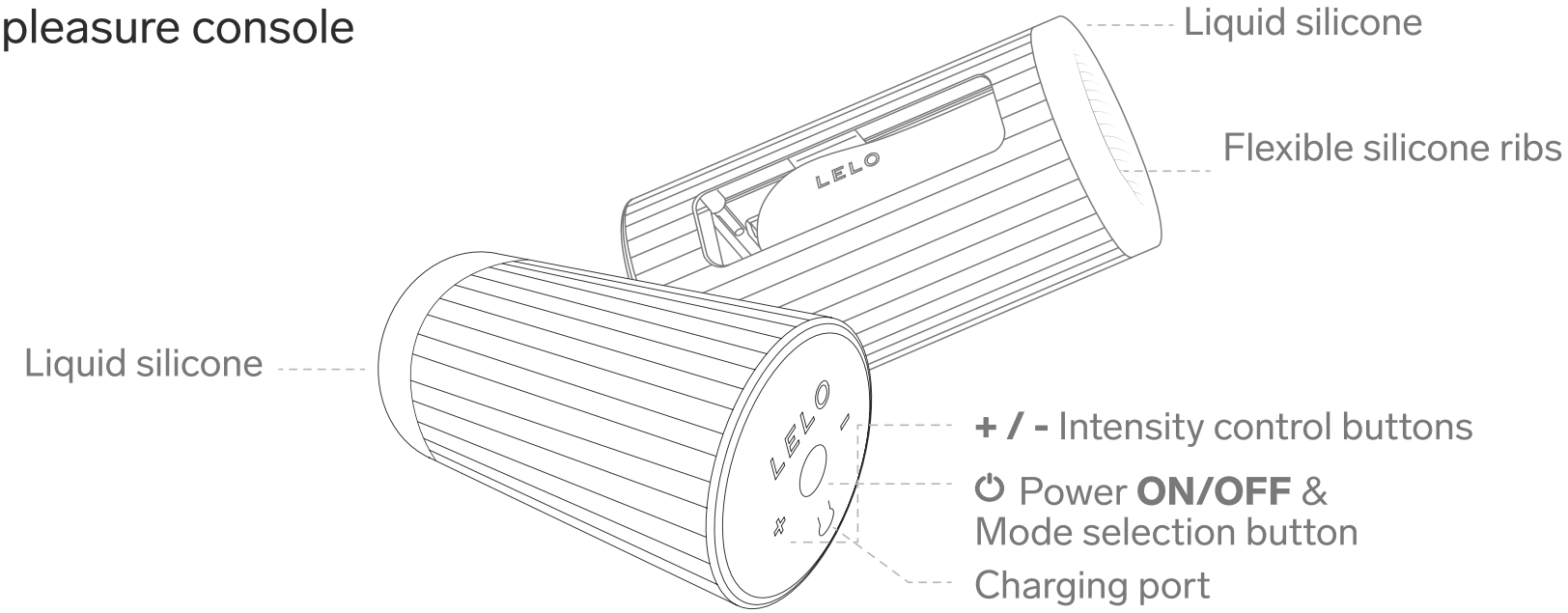

HOW TO FIND FCC ID AND IC INFORMATION IN THE USER APP

- Open the "LELO APP"
- Click "Menu"
- Click "Legal & Regulatory"
- Click "F1SV3"
- FCC ID: "ZT5-F1"
- IC: "9798A-F1S"
- HVIN: "RevH"
- PMN: "F1SV3"

USING YOUR F1S™ V3

HOW TO USE YOUR PRODUCT WITHOUT THE LELO™ APP

- Before the first use, charge your F1S™ V3 / XL for 2 hours.
- Press and hold the ⏻ button to turn it on.
- Press the ⏻ button to switch between 4 modes.
- Use the **+** and the **-** buttons to increase or decrease the intensity.
- Press and hold the ⏻ button to turn off.

HOW TO USE YOUR PRODUCT WITH THE LELO™ APP

- Before the first use, charge your F1S™ V3 / XL for 2 hours.
- DOWNLOAD THE IOS / ANDROID version.
- Press the ⏻ button for 3 seconds to turn it on while activating the Bluetooth.
- All the LED lights will blink simultaneously, showing the Bluetooth pairing.
- Open the LELO™ APP and locate the toy icon on the bottom of the screen. Find your F1S™ V3 and select "Connect". Press and hold the button on your device. Confirm the connection by pressing the button on your product again.
- Go to "MY LELO TOYS" and select "PLAY".
- Choose between four different control modes.
- Select "SETTINGS" to configure additional modes.
- To save your settings for offline use, select "SAVE" at the bottom of your screen.
- Use the drop-down menu to set the default auto power off from 10-20 minutes. You can check the battery level in the upper left corner. For more information about the LELO™ APP, use the detailed instruction manual located HERE.

USING F1S™ V3 / XL

- how to hold

- where to place

Tip:
For an even more pleasurable sensation, apply a liberal amount of LELO Personal Moisturizer to your body and to F1S™ V3 before and during use.

CHARGING YOUR F1S™ V3 / XL

- Insert the DC plug into the DC port at the base of your F1S™ V3 / XL.
- Insert the mains plug into a USB Port. The LED on the interface of your F1S™ V3 / XL will pulse to indicate it is charging. When it is fully charged, the LED will emit a steady glow. When the battery is running low, the LED on your F1S™ V3 / XL will emit a blinking white light.

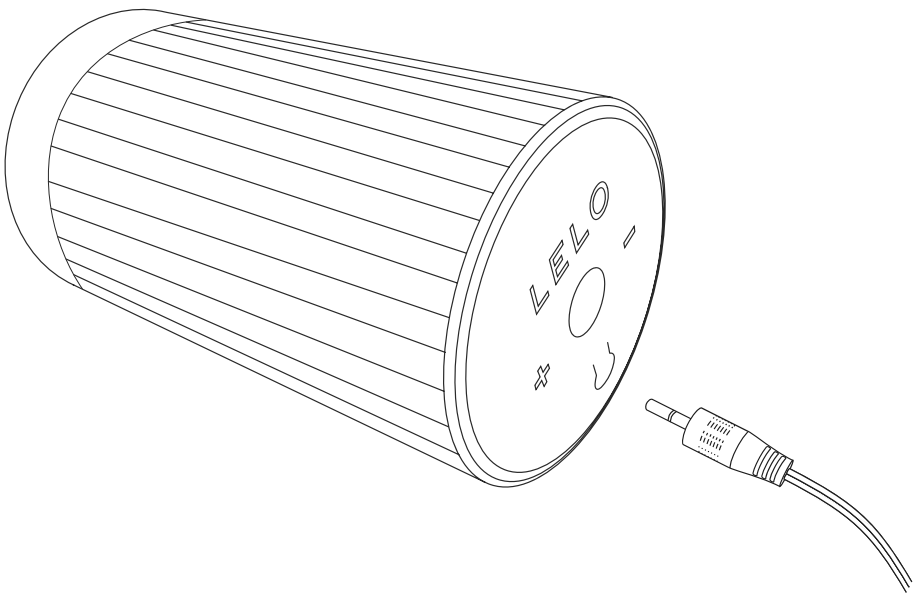

Only use original chargers provided by LELO with your F1S™ V3 / XL.

CLEANING, STORAGE, AND SAFETY

Using F1S™ V3 / XL with hand creams or silicone-based lubricants may make the silicone permanently tacky.

F1S™ V3 / XL is fully waterproof, making cleaning simple. Rinse and spray with LELO Toy Cleaner, then rinse again and allow it to dry.

Always clean your F1S™ V3 / XL thoroughly before and after each use. You can wash the silicone with warm water and antibacterial soap, rinse with clean hot water, and pat dry with a lint-free cloth or towel. Never use cleansers containing alcohol, petrol, or acetone.

Avoid leaving your F1S™ V3 / XL in direct sunlight and NEVER expose it to extreme heat.

Store your F1S™ V3 / XL in a dust-free place and keep it away from products of other materials.

The appliances must only be supplied at SELV.

TROUBLESHOOTING

The LED on your F1S™ V3 / XL does not pulse when the charger is connected:

- The battery is drained and will require several minutes to acknowledge that it is being charged.
- The charger is not properly connected. Check wall and DC sockets.

Your F1S™ V3 / XL does not activate when the ⏻ button is pressed:

- The battery is empty. Recharge your F1S™ V3 / XL.
- The interface of your F1S™ V3 / XL is locked. Hold down **+** and **–** for 3 seconds.

If you experience any other problems with your F1S™ V3 / XL or if you have any questions regarding the operation, please contact: **customercare@lelo.com**

SPECIFICATIONS

F1S™ V3

Size: 144 x Φ 72 mm / 5.67 x 2.83 in
Insertable length: 110 mm / 4.3 in
Girth: 40mm-60mm / 1.75 in - 2.36 in
Weight: 314 g / 0.69 lb

F1S™ V3 XL

Size: 154 x Φ 72 mm / 6 x 2.83 in
Insertable length: 120 mm / 4.7 in
Girth: 42mm- 64mm / 1.65 in - 2.5 in
Weight: 320 g / 0.7 lb

F1S™ V3 & XL

Materials: Body-safe silicone, Aluminum alloy, LEXAN™ 141R
Battery: Li-Ion 850 mA 3.7 V
Charging: 2 h at 5.0 V 850 mA
Rated Power:
- Input: 5V 3.75W
- Output: 3.7V 1.5W

User time: up to 2 h
Standby: 90 days
Frequency:
- suction motor: 64 Hz
- vibration motor: 93 Hz

Max. noise level: < 75 dB
Interface: 3 buttons

REGISTER WARRANTY

To activate your 1-year limited warranty, register the number provided on the LELO Authenticity Card at LELO.COM/SUPPORT.

1-YEAR WARRANTY

LELO warrants this pleasure object for a period of ONE (1) YEAR, after the date of original purchase, against defects due to faulty workmanship or materials. The warranty covers working parts that affect the function of the pleasure object. It does NOT cover cosmetic deterioration caused by fair wear and tear or damage caused by accident, misuse, or neglect. Any attempt to open or take apart the pleasure object (or its accessories) will void the warranty.
If you discover a defect and notify LELO during the warranty period, LELO will, at its discretion, replace the pleasure object free of charge. Claims under warranty must be supported by reasonable evidence of the date of claim is within the warranty period. To validate your warranty, please keep your original purchase receipt together with these warranty conditions for the duration of the warranty period. To claim your warranty, you must log in to your account at LELO.COM and then select the option to make a warranty claim.
Shipping costs are non-refundable. This undertaking is in addition to the consumer's statutory rights and does not affect those rights in any way.

DISPOSAL INFORMATION

Disposal of old electronic equipment (applicable in the EU and other European countries with separate waste collection systems):
The crossed-out dustbin symbol indicates that this pleasure object should not be treated as household waste, but rather be brought to the appropriate collection point for the recycling of electrical and electronic equipment.

SERIAL NO. SN

IPX 7 IPx7

MANUFACTURE DATE

CLASS B DIGITAL APPARATUS

FOLLOW INSTRUCTIONS FOR USE

Hereby, LELOi AB declares that the radio equipment type [Non-Specific Short Range Device] is in compliance with Directive 2014/53/EU. LELOi AB declares that the product is also compliant with Directive 2011/65/EU (RoHS). The full text of the EU declaration of conformity is available at the following internet address: https://www.lelo.com/regulatory

DISCLAIMER: Users of this product do so at their own risk. Neither LELO nor its retailers assume any responsibility or liability for the use of this product. Changes or modifications not expressly approved by the manufacturer may void the user's authority to operate the equipment. The model may be changed for improvements without notice.

© 2024 LELOi AB. All rights reserved.

LELOi AB, Karlavägen 41, 114 31 Stockholm, Sweden.

Distributed in the US by LELO Inc., 5799 Fontanoso Way, San Jose, CA 95138, USA.

Distributed in Australia by LELO Oceania 6 Prohasky Street, Port Melbourne, VIC 3207, Australia.

Designed and developed by LELO Sweden.

Made in China.

US and International patents or patent applications apply to this product: visit https://www.lelo.com/intellectual-property

www.lelo.com